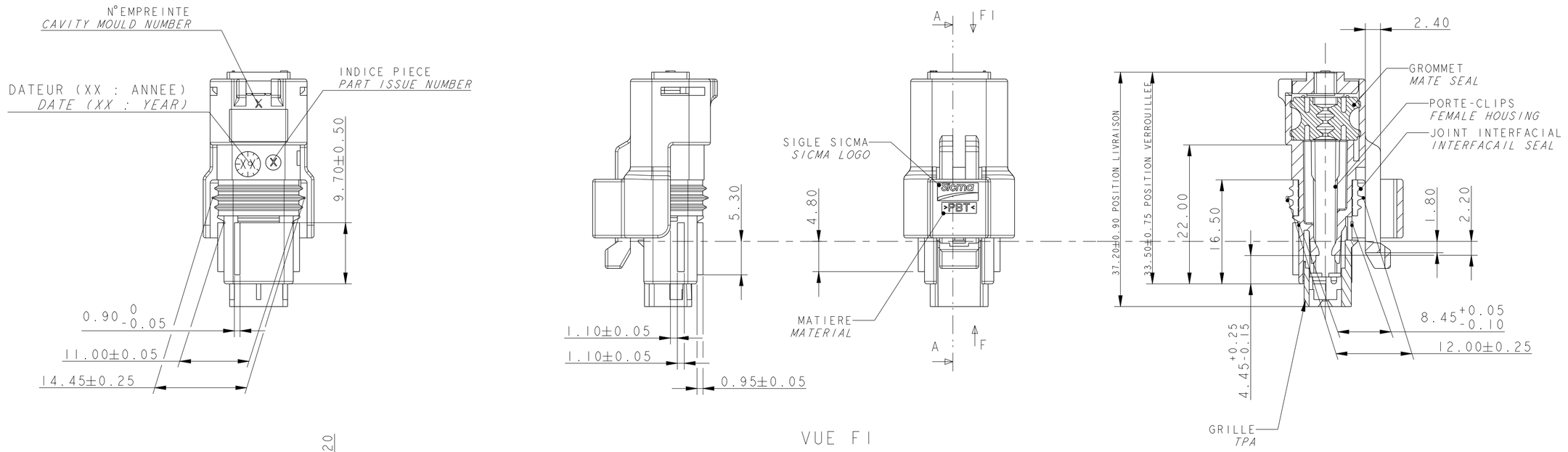

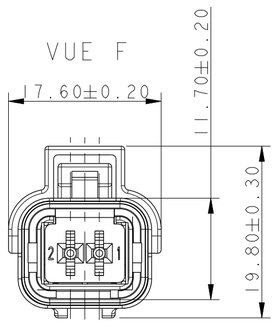

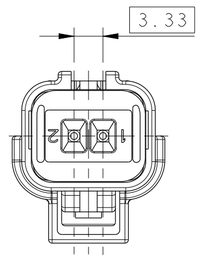

CONNECTEUR CONFORME A LA SPECIFICATION PRODUIT FE PS 04 032 REV 01
CONDITIONNEMENT SUIVANT NORME E 73.03.150.G
MASSE DU PRODUIT LIVRABLE=5g (ISOLANT + GRILLE + GROMMET + JOINT)
DIAMETRE DE FILS: MINI 1.40
MAXI 2.80

CONNECTOR IN ACCORDANCE WITH THE PRODUCT SPECIFICATION FE PS 04 032 REV 01
PACKAGING FOLLOWING STANDARD 73.03.150.G
MASS OF AVAILABLE PRODUCT = 5g (HOUSING + TPA +MATE SEAL + INTERFACIAL SEAL)
DIAMETER OF WIRES : MINI 1.40
MAXI 2.80

⚠ - CHARNIERE DE PLAQUETTE ARRIERE ABSENTE OU CASSE ADMISE
- PARTICULES DE SILICONE DANS LE GROMMET, BOUCHANT PARTIELLEMENT UN ORIFICE, ADMISE
- *HINGE REAR PLATE ABSENT OR BROKEN ACCEPTED*
- *SILICONE PARTICULES IN THE GROMMET, PARTIALLY PLUGGING A HOLE, ADMITTED*

DESIGNATION	REF. MVL	MATIERE	COULEUR
BOUCHON	210 A 01 5 019	PBT NON CHANGE	VERT
PORTE-CLIPS	211 I 1 036	PBT NON CHANGE	MARRON
	211 I 2 036		ROUGE
	211 I 3 036		ORANGE
	211 I 5 036		VERT
	211 I 4 036		JAUNE
	211 I 8 036		GRIS
	211 I 6 036		BLEU
	211 I 9 036		BLANC
	211 I 0 036		NOIR
GRILLE	211 M 4 020	PBT 15% FV	JAUNE
GROMMET	211 M 108	SILICON AUTOLUBRIFIE	VERT
JOINT INTERFACIAL	211 M 075	SILICON 4% D' HUILE	BLEU

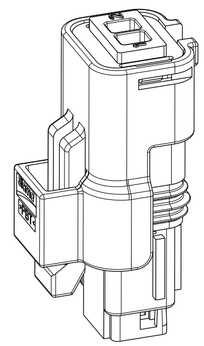

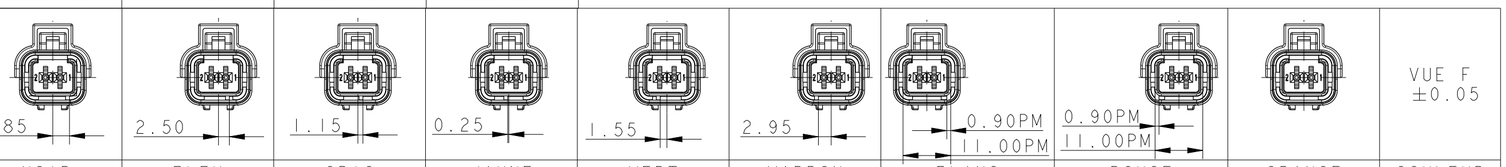

COULEUR	NOIR	BLEU	GRIS	JAUNE	VERT	MARRON	BLANC	ROUGE	ORANGE
MVL PART NO.	211 PC 02 2 S 0 049	211 PC 02 2 S 6 049	211 PC 02 2 S 8 049	211 PC 02 2 S 4 049	211 PC 02 2 S 5 049	211 PC 02 2 S 1 049	211 PC 02 2 S 9 049	211 PC 02 2 S 2 049	211 PC 02 2 S 3 049
MVL PART REV.	D	D	D	D	D	D	D	D	D
DELPHI PART NO.	10768566	10768705	10768564	10787552	10779506	10768565	10787349	10787260	10787350
DELPHI PART REV.	03 G	03 G	03 G	03 G	03 G	03 G	03 G	03 G	03 G

NOTE 1: WITH GREEN GROMMET AND BLUE SEAL

NOTA 2 : PRECONISATION D'UTILISATION PU001
NOTE 2 : USER'S MANUEL PU001

CONNECTIQUE SICMA

-	-	-
	-	-
	-	-
	-	DELPHI P/N ADDED
		PART REVISION FOR P/N DELPHI CHANGED

ECN-NO. *NUMERO ECN*	POSITION *POSITION*	CHANGE DESCRIPTION *MODIFICATION*

PRODUCT SPEC. *SPECIF. PRODUIT*: -
PACKAGING SPEC. *SPECIF. EMBALLAGE*: -
APPLICATION SPEC. *SPECIF. APPLICATION*: -

COPYRIGHT DELPHI CORPORATION AND/OR ITS AFFILIATES. ALL RIGHTS RESERVED. REVISED
THIS DRAWING IS THE PROPERTY OF DELPHI CORPORATION AND CONTAINS DELPHI CONFIDENTIAL INFORMATION. THE REPRODUCTION, DISTRIBUTION AND UTILIZATION OF THIS DOCUMENT OR ITS RELATED CAD MATH DATA, AS WELL AS COMMUNICATION OF ANY CONTENT TO OTHERS, WITHOUT EXPRESS AUTHORIZATION, IS PROHIBITED.
CE PLAN EST LA PROPRIETE DE DELPHI CORPORATION ET CONTIENT DES INFORMATIONS DELPHI CONFIDENTIELLES. LA REPRODUCTION, LA DISTRIBUTION ET L'UTILISATION DE CE DOCUMENT OU DE SES DONNÉES MATHÉMATIQUES CAD, AINSI QUE LA COMMUNICATION DE TOUT CONTENU À AUTRUI, SANS AUTORISATION EXPRESSE, EST INTERDITE.

TOLERANCES *TOLERANCES*: ±0.1;±2°
MATERIAL : *MATIERE :* SEE TABLE
SURFACE FINISH *ETAT DE SURFACE*: -
COUNTERPART Nr. *CONTRE-PARTIE N°*: -
COLOUR : *COULEUR :* SEE TABLE
DO NOT MEASURE DRAWING *NE PAS PRENDRE DE COTES*
TOOL NO. *OUTIL N°*: -
ECO Loc. Code *CODE B.E.*: FE
TITLE *DESIGNATION*: SEE NOTE

DELPHI
DELPHI PACKARD ELECTRICAL/ELECTRONIC ARCHITECTURE
EPERNON, FRANCE

CAD SYSTEM: pro / eng.
ISO PROJECTION *PROJECTION ISO*
DIMENSION IN MILLIMETERS *DIMENSIONS EN MILLIMETRES*
DWG SIZE *FORMAT*: A2

	DATE *DATE*	NAME *NOM*
CREATED BY *CREE PAR*	2002-07-18	CM
MODIFIED BY *MODIF. PAR*	2013/04/19	F FAURIE
CHECKED BY *VERIF. PAR*	2013/04/22	S LACOTE
APPROVED BY *APPR. PAR*	2013/04/22	Pascal MENARD

PROJECT *PROJET*: 2 WAYS FEMALE CONNECTOR
ESR NO. *NUMERO ESR*: -
CAT. NO. *NUMERO CAT.*: -
FILE NAME *NOM DE FICHIER*: 211FT0443
DOCUMENT UNDER PDS CONTROL NO MODIFICATION ALLOWED OUTSIDE *DOCUMENT GERE SOUS P.D.S. PAS DE MODIFICATION EN DEHORS*

DRAWING NUMBER *REF. PLAN*: 211FT0443
REV. *IND.*: G
STATE *ETAT*: SERIAL RELEASED
PART NUMBER *REF. ARTICLE*: See Table
REV. *IND.*: -
APPROVAL LEVEL *NIV. D'APPROBATION*: -
SHEET *FEUILLE*: 1 of 1 sur 1
SCALE *ECH.*: 2:1

EUR C04 112 F29 PDS