4.20mm MINI POWER RECEPTACLE

Leotronics

6740 SERIES. For High Current / High Density

Features

- Available in 2 through 24 circuits
- Positive housing lock for secure mating retention
- Material: Nylon UL 94 V-2, or Nylon UL 94V-0 available
- For free hanging or panel mounted. Colour: Natural
- 4.20mm centre spacing wire to wire connector
- Mates with 6741, 6742, 6743, 6744, 6746 and 6747 series crimp terminals
- Low engagement force terminals in natural colour
- For GWT option (Glow Wire Test Approval), please add **E** at the end of Part Number (Example: 6740-XXXX**E**)

Dimensional Information

RECEPTACLE CONNECTOR

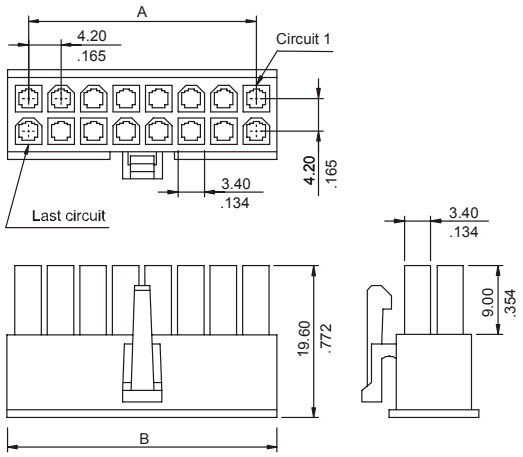

Ordering and Dimensional Information

PLUG CONNECTOR

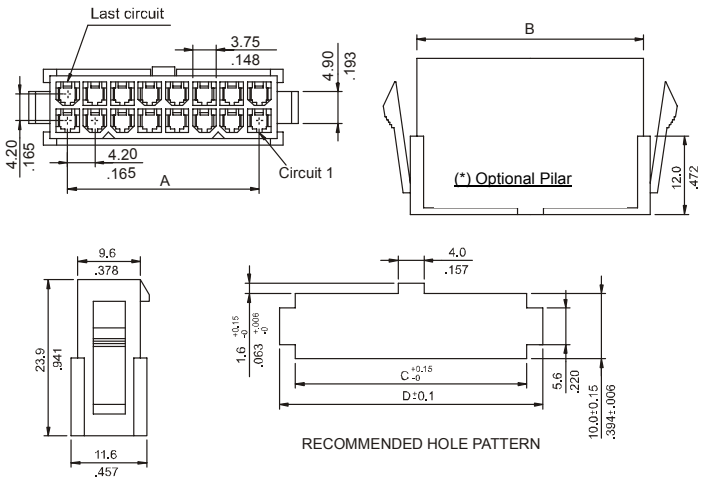

RECEPTACLE

Circuit Size	Current Rating Amps	Part Number		Dimensions			
		UL 94V-0	UL 94V-2	A	B	C	D
2	9	**6740 - 1020**	**6740 - 1021**	-	5.50 (0.217)	-	-
4	8	**6740 - 1040**	**6740 - 1041**	4.20 (0.156)	9.70 (0.382)	-	-
6	8	**6740 - 1060**	**6740 - 1061**	8.40 (0.331)	13.90 (0.547)	-	-
8	7	**6740 - 1080**	**6740 - 1081**	12.60 (0.496)	18.10 (0.713)	-	-
10	7	**6740 - 1100**	**6740 - 1101**	16.80 (0.661)	22.30 (0.878)	-	-
12	6	**6740 - 1120**	**6740 - 1121**	21.00 (0.827)	26.50 (1.043)	-	-
14	6	**6740 - 1140**	**6740 - 1141**	25.20 (0.992)	30.70 (1.209)	-	-
16	6	**6740 - 1160**	**6740 - 1161**	29.40 (1.157)	34.90 (1.374)	-	-
18	6	**6740 - 1180**	**6740 - 1181**	33.60 (1.322)	39.10 (1.539)	-	-
20	6	**6740 - 1200**	**6740 - 1201**	37.80 (1.487)	43.30 (1.705)	-	-
22	6	**6740 - 1220**	**6740 - 1221**	42.00 (1.652)	47.50 (1.870)	-	-
24	6	**6740 - 1240**	**6740 - 1241**	46.20 (1.817)	51.70 (2.035)	-	-

PLUG

CIRC.	Current Rating Amps	Standard Version		Options				Dimensions			
				Without Ears		W/O Ears and Pilar(*)					
		UL 94V-0	UL 94V-2	UL 94V-2	UL 94V-0	UL 94V-2	UL 94V-0	A	B	C	D
2	9	**6740 - 2020**	**6740 - 2021**	**6740 - 2022**	**6740 - 2023**	**6740 - 2024**	**6740 - 2025**	-	5.70 (0.224)	6.10 (0.240)	11.10 (0.437)
4	8	**6740 - 2040**	**6740 - 2041**	**6740 - 2042**	**6740 - 2043**	**6740 - 2044**	**6740 - 2045**	4.20 (0.156)	9.90 (0.390)	10.30 (0.406)	15.30 (0.602)
6	8	**6740 - 2060**	**6740 - 2061**	**6740 - 2062**	**6740 - 2063**	**6740 - 2064**	**6740 - 2065**	8.40 (0.331)	14.10 (0.555)	14.50 (0.571)	19.50 (0.768)
8	7	**6740 - 2080**	**6740 - 2081**	**6740 - 2082**	**6740 - 2083**	**6740 - 2084**	**6740 - 2085**	12.60 (0.496)	18.30 (0.720)	18.70 (0.736)	23.70 (0.933)
10	7	**6740 - 2100**	**6740 - 2101**	**6740 - 2102**	**6740 - 2103**	**6740 - 2104**	**6740 - 2105**	16.80 (0.661)	22.50 (0.886)	22.90 (0.902)	27.90 (1.098)
12	6	**6740 - 2120**	**6740 - 2121**	**6740 - 2122**	**6740 - 2123**	**6740 - 2124**	**6740 - 2125**	21.00 (0.827)	26.70 (1.051)	27.10 (1.067)	32.10 (1.264)
14	6	**6740 - 2140**	**6740 - 2141**	**6740 - 2142**	**6740 - 2143**	**6740 - 2144**	**6740 - 2145**	25.20 (0.992)	30.90 (1.217)	31.40 (1.236)	36.30 (1.429)
16	6	**6740 - 2160**	**6740 - 2161**	**6740 - 2162**	**6740 - 2163**	**6740 - 2164**	**6740 - 2165**	29.40 (1.157)	35.10 (1.382)	35.60 (1.402)	40.50 (1.594)
18	6	**6740 - 2180**	**6740 - 2181**	**6740 - 2182**	**6740 - 2183**	**6740 - 2184**	**6740 - 2185**	33.60 (1.322)	39.30 (1.547)	39.80 (1.567)	44.70 (1.706)
20	6	**6740 - 2200**	**6740 - 2201**	**6740 - 2202**	**6740 - 2203**	**6740 - 2204**	**6740 - 2205**	37.80 (1.487)	43.50 (1.713)	44.00 (1.732)	48.90 (1.925)
22	6	**6740 - 2220**	**6740 - 2221**	**6740 - 2222**	**6740 - 2223**	**6740 - 2224**	**6740 - 2225**	42.00 (1.652)	47.70 (1.878)	48.20 (1.898)	53.10 (2.091)
24	6	**6740 - 2240**	**6740 - 2241**	**6740 - 2242**	**6740 - 2243**	**6740 - 2244**	**6740 - 2245**	46.20 (1.817)	51.90 (2.043)	52.40 (2.063)	57.30 (2.256)