Mini Relays 12 V

0 986 332 300

Replacement for: 0 332 019 150; 0 332 019 801

Change over	Normal close	Normal open
		✓

2 x 87 terminal

Mounting bracket	Resistor	Diode	Life durability (cycles)	Current	Voltage	Number of Pins	Housing type	Temperature range	Degree of protection housing	Degree of protection connection
✓	X	X	250,000	30 A	12 V	5	Plastic housing	-40… +85°C	IP54	IP20

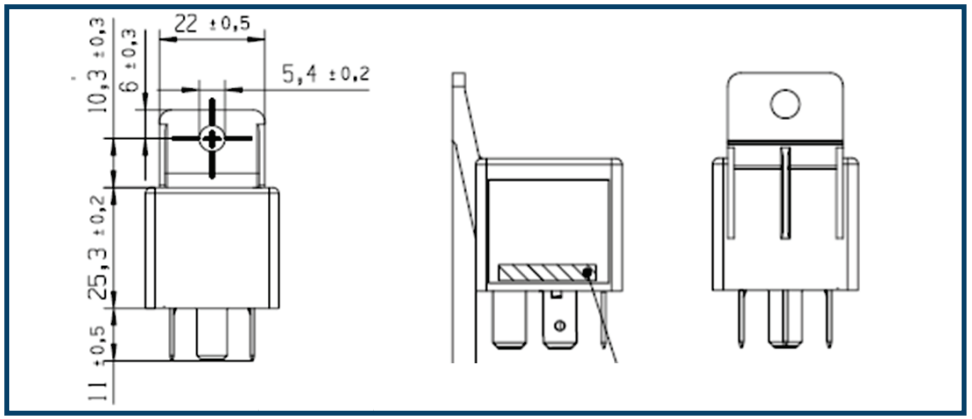

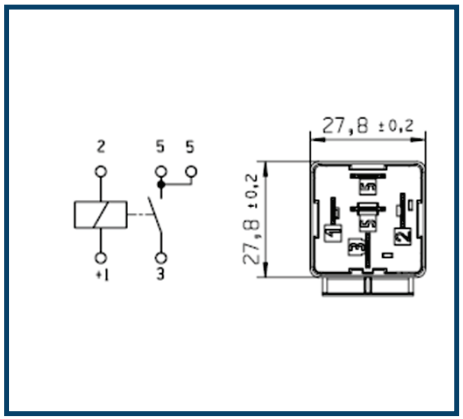

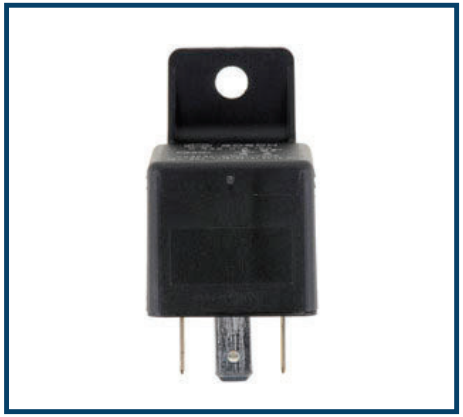

Back to general overview

© Robert Bosch GmbH 2024. All rights reserved, also regarding any disposal, exploitation, reproduction, editing, distribution, as well as in the event of applications for industrial property rights.