THIS DRAWING IS UNPUBLISHED. RELEASED FOR PUBLICATION 2018
© COPYRIGHT 1994 BY TE CONNECTIVITY ALL RIGHTS RESERVED.

REVISIONS

P	LTR	DESCRIPTION	DATE	DWN	APVD
	B	REVISED PER E.O. P21222	07DEC2011	DM	RDR
	C	REVISED PER PCN E-18-001206	24JAN2018	JA	DM
	C1	REVISED PER PCN E-19-008828	04JUNE2019	JA	IG
	C2	REVISED PER PCN E-19-018080	19NOV2019	MK	DM

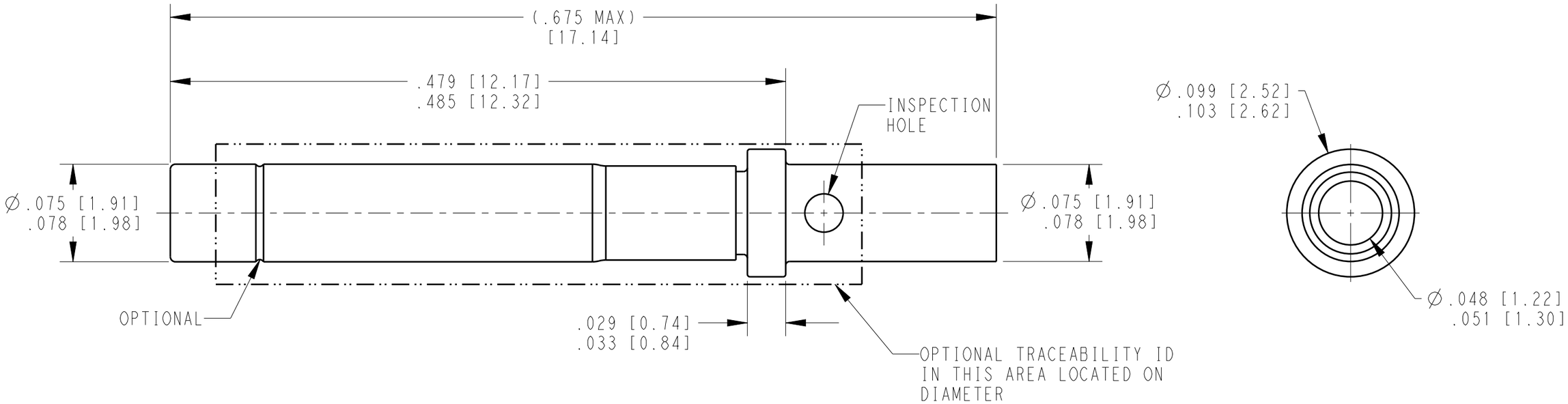

TE INTERNAL PN	DEUTSCH PN	PLATING
0462-201-2031	0462-201-2031	GOLD
0462-201-20141	0462-201-20141	NICKEL
0462-201-20309	0462-201-20309	TIN

C2 1. SEE APPLICATION SPECIFICATION 114-151004 FOR CRIMP TOOLS AND WIRE RANGE

NOTES: UNLESS OTHERWISE SPECIFIED

THIS DRAWING IS A CONTROLLED DOCUMENT.

DIMENSIONS: INCHES [mm]

TOLERANCES UNLESS OTHERWISE SPECIFIED:
0 PLC ±
1 PLC ±
2 PLC ±
3 PLC ±
4 PLC ±
ANGLES ±

MATERIAL

FINISH

DWN D.MEYER 16APR1999
CHK D.MEYER 07DEC2011
APVD R.REED 07DEC2011
PRODUCT SPEC 108-151004
APPLICATION SPEC 114-151004
WEIGHT 0.27g

TE Connectivity

NAME CONTACT SOCKET SIZE 20

SIZE	CAGE CODE	DRAWING NO	RESTRICTED TO
A3	4AFU8	C-0462-201-20XX	-

CUSTOMER DRAWING

SCALE 12:1 SHEET 1 OF 1 REV C2

1470-19 (3/13)