THIS DRAWING IS UNPUBLISHED. RELEASED FOR PUBLICATION ,19 .
© COPYRIGHT 19 BY AMP INCORPORATED. ALL RIGHTS RESERVED.

LOC	DIST
G	16

REVISIONS

P	LTR	DESCRIPTION	DATE	DWN	APVD
	0	RELEASED, WAS 92-4072-2313-1	-	-	-
	A	REV PER ECN 0720-0290-94	9/30/94	KDL	JPK
	B	REV PER ECN 0720-0446-94	12/16/94	KW	JK
	C	REV PER ECN 0K50-0003-96	08/13/96	KW	JK
	D	REV PER ECN 0K20-0004-97	02/10/97	KL	JK
	E	REV PER EC# 0K40-0140-00	6-28-00	PC	GI

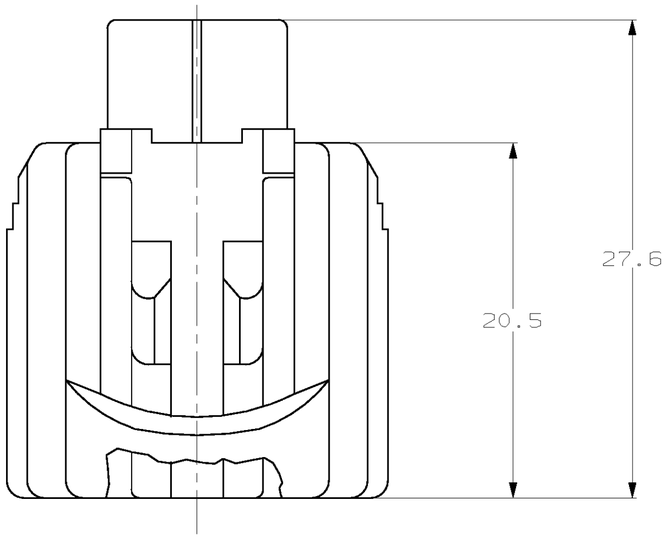

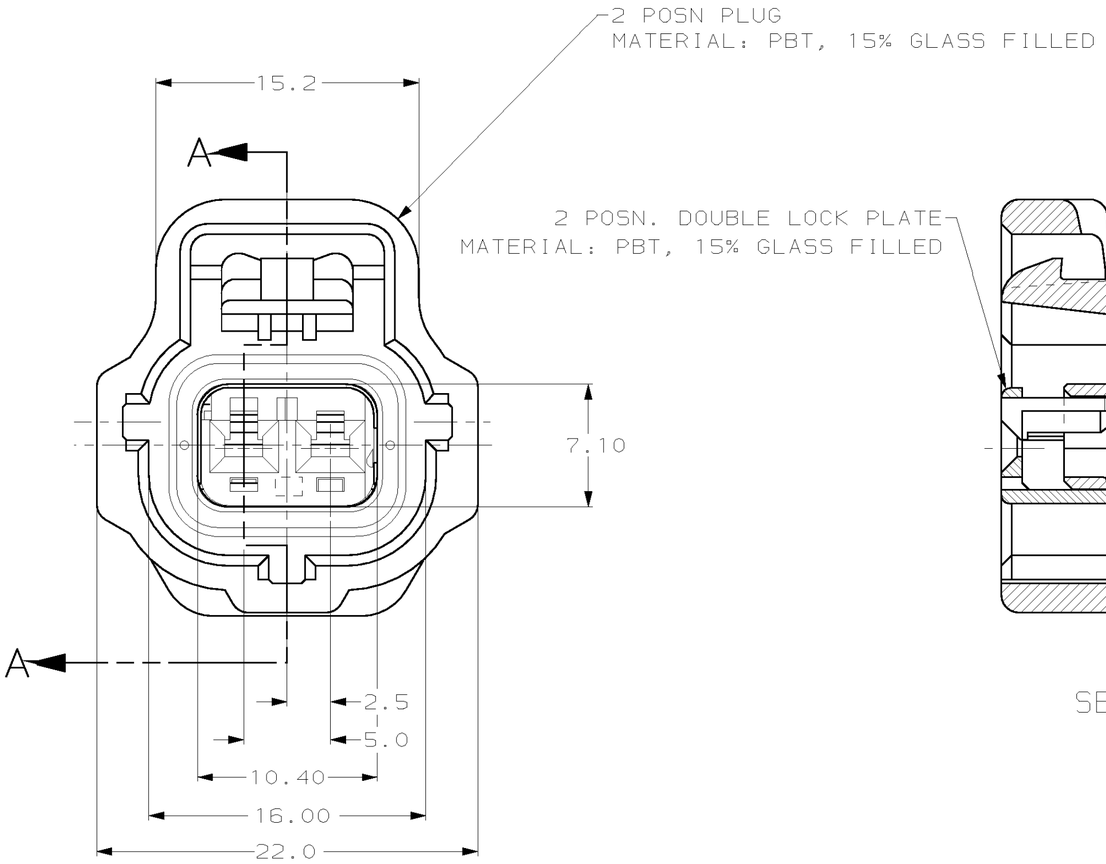

KEYING TYPE A

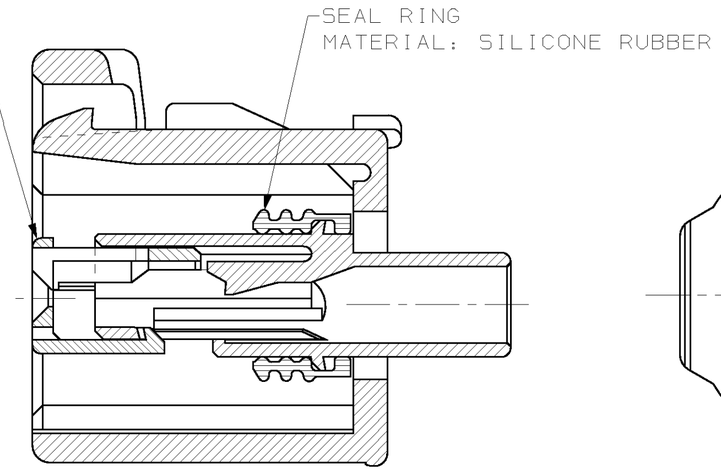

SECTION A-A

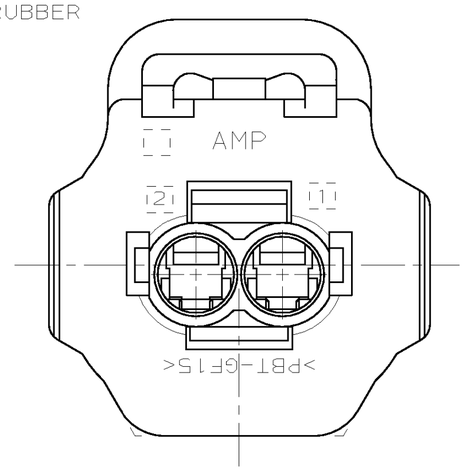

NATURAL	184000-3
BLACK	184000-1
PLUG COLOR	PART NO

THIS DRAWING IS A CONTROLLED DOCUMENT FOR AMP INCORPORATED. IT IS SUBJECT TO CHANGE AND THE CONTROLLING ENGINEERING ORGANIZATION SHOULD BE CONTACTED FOR THE LATEST REVISION.

DIMENSIONS: mm

TOLERANCES UNLESS OTHERWISE SPECIFIED:

0 PLC	±-
1 PLC	±0.30
2 PLC	±0.15
3 PLC	±-
4 PLC	±-
ANGLES	±1°
FINISH	-

MATERIAL -

DWN KD LYTLE 3/28/94
CHK JP KUNKLE 4/19/94
APVD -
PRODUCT SPEC -
APPLICATION SPEC -
WEIGHT -

CUSTOMER DRAWING

AMP Incorporated
Harrisburg, PA 17105-3608

NAME 1 X 2 PLG ASY KEY A-C3

SIZE	CAGE CODE	DRAWING NO
A2	00779	C-184000

SCALE	SHEET	OF	REV
4:1	1	1	E

184000

AMP 1471-9 REV 10/93