THIS DRAWING IS UNPUBLISHED. RELEASED FOR PUBLICATION – , – .
© COPYRIGHT – By – ALL RIGHTS RESERVED.

LOC	DIST
J	—

REVISIONS

P	LTR	DESCRIPTION	DATE	DWN	APVD
	C1	OBSOLETE 174935-7 ECR-15-015932	30OCT2015	TS	KB

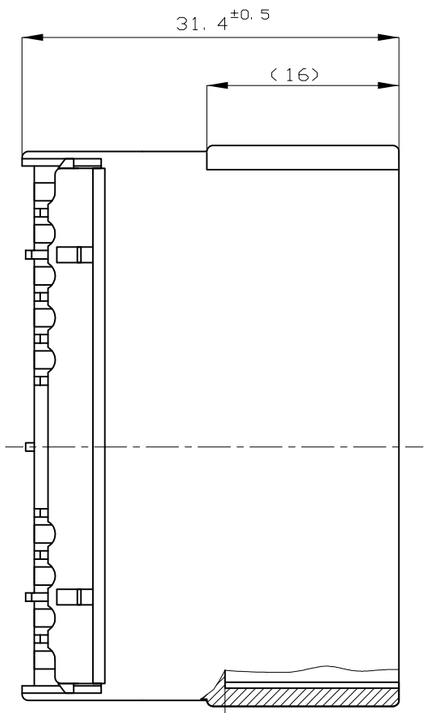

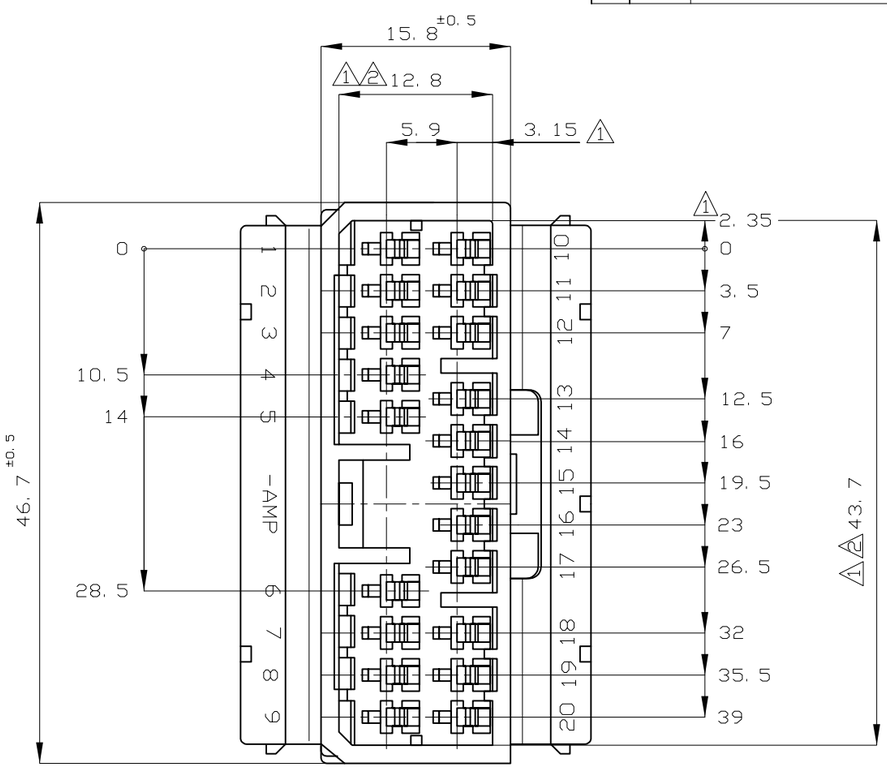

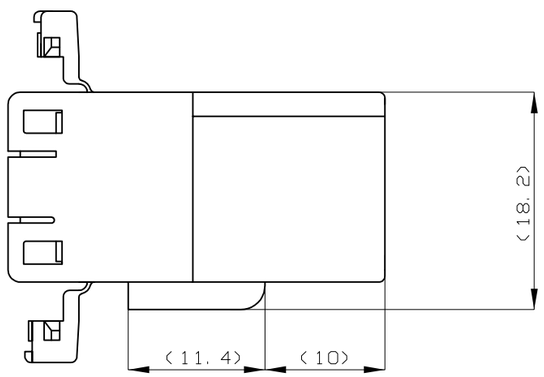

1 -A- 面より2mmの範囲で測定。
2 相手ハウジングと所定の機能を満足して嵌合できること。
3. 内装するタブコンタクト型番：173633, 173645
4. 嵌合相手ハウジング型番：174952

1 MUST BE KEPT BETWEEN -A- AND 2.
2 TO BE MATED WITH THE PLUG HOUSING SMOOTHLY.
3. APPLIED TAB CONTACT PART NUMBER: 173633, 173645.
4. APPLIED PLUG HOUSING PART NUMBER: 174952, etc.

	V-2	WHITE 白	1-174936-1
OBSOLETE	HB	YELLOW 黄	174936-7
	HB	GRAY 灰	174936-6
	HB	BLUE 青	174936-5
	HB	BLACK 黒	174936-2
	HB	WHITE 白	174936-1
	FLAMMABILITY OF MATERIAL 使用材料難燃グレード	COLOR 色	PART NUMBER 型番

TOLERANCE UNLESS OTHERWISE SPECIFIED: 一般公差
0<×≤ 10 : ±0.2
10<×≤ 30 : ±0.25
30<×≤100 : ±0.3
ANGLE 角度 ; ±3°

THIS DRAWING IS A CONTROLLED DOCUMENT.

DIMENSIONS: mm

TOLERANCES UNLESS OTHERWISE SPECIFIED:
0 PLC ± –
1 PLC ± –
2 PLC ± –
3 PLC ± –
4 PLC ± –
ANGLES ± –

MATERIAL: PBT
FINISH: –

DWN	A.NAGAMINE 10/17'90
CHK	M.OHSHIMA 10/18'90
APVD	M.NOGUCHI 10/18'90
PRODUCT SPEC	108-5264
APPLICATION SPEC	—
WEIGHT	–

TE Connectivity

NAME: 070 SERIES MULTI-LOCK CONNECTOR 20POSITION CAP HOUSING (W-W)

SIZE	CAGE CODE	DRAWING NO	RESTRICTED TO
A3	00779	C-174936	—

CUSTOMER DRAWING | SCALE 2:1 | SHEET 1 OF 1 | REV C1