THIS DRAWING IS UNPUBLISHED. RELEASED FOR PUBLICATION 2014
© COPYRIGHT 2014 BY -TE CONNECTIVITY ALL RIGHTS RESERVED.

LOC	DIST
-	-

REVISIONS

P	LTR	DESCRIPTION	DATE	DWN	APVD
	A	REVISED PER E.O A 12952	17MAR1993	-	JA
	B	REVISED PER E.O P15222	12FEB1997	-	RDR
	C	REVISED PER E.O P15887	15FEB1999	-	RDR
	C1	REVISED PER E.O-15-000356	08JAN2015	PS	DM

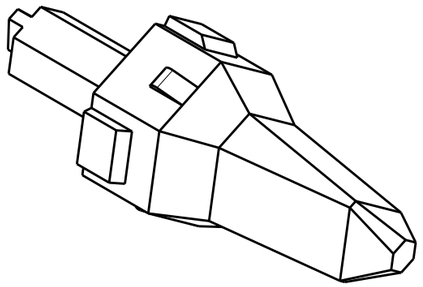

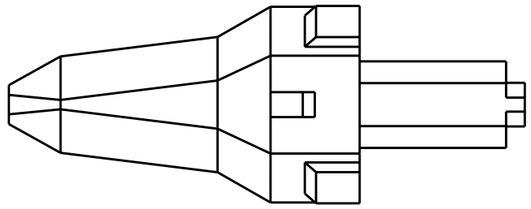

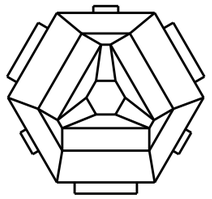

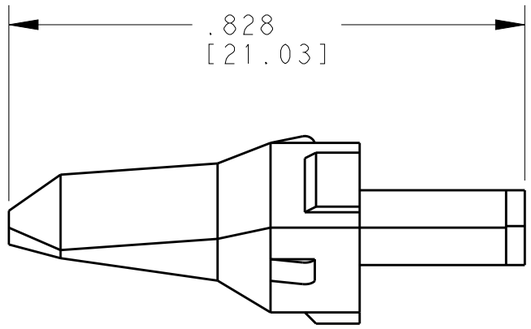

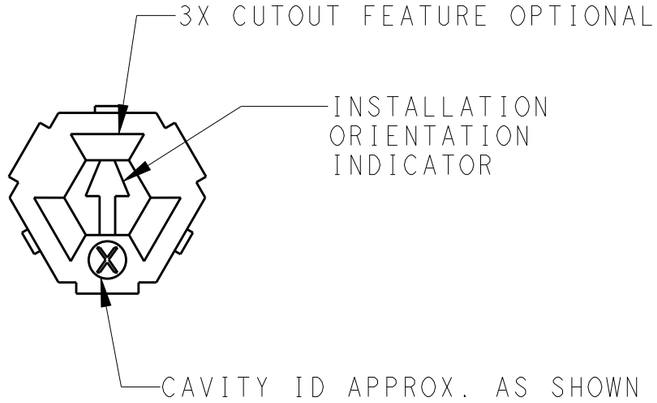

1. USED WITH DT04-3P-****(****= ALL MODIFICATIONS)
   CONSULT FACTORY FOR MODIFICATION AND APPLICATION.

NOTES:

THIS DRAWING IS A CONTROLLED DOCUMENT.

DIMENSIONS: INCHES[mm]

TOLERANCES UNLESS OTHERWISE SPECIFIED:

0 PLC	±-
1 PLC	±-
2 PLC	±-
3 PLC	±0.20[0.51]
4 PLC	±-
ANGLES	±0°30'0"

MATERIAL: PBT30%GF GREEN

FINISH: -

DWN	A.LEE	04FEB1999
CHK	S.THEIS	08FEB1999
APVD	S.THEIS	08FEB1999

PRODUCT SPEC: -

APPLICATION SPEC: -

WEIGHT: 0.53g

CUSTOMER DRAWING

TE Connectivity

NAME: WEDGE LOCK 3 WAY RECEPTACLE DT SERIES

SIZE	CAGE CODE	DRAWING NO	RESTRICTED TO
A3	4AFU8	C-W3P	-

SCALE 4:1 SHEET 1 OF 1 REV C1

1470-19 (3/11)