THIS DRAWING IS UNPUBLISHED. RELEASED FOR PUBLICATION DEC ,2004.
© COPYRIGHT 2004 BY TYCO ELECTRONICS CORPORATION. ALL RIGHTS RESERVED.

LOC	DIST
E	B

REVISIONS

P	LTR	DESCRIPTION	DATE	DWN	APVD
	B	EBD0-0267-04	15DEC04	JMS	FWK

NOTES

1. SINGLE PACK IN ACCORDANCE WITH AMP SPEC 107-3275
2. 100 TRAY PACK IN ACCORDANCE WITH AMP SPEC 107-3275
3. Au PLATING OVER Ni PLATING OVER Cu PLATING
4. Ni PLATING OVER Cu PLATING
5. HAND TOOL: 9-1478240-0
6. DIE SET: SEE TABLE
7. CHARACTERISTICS
   FREQUENCY RANGE: DC-2GHz
   NOMINAL IMPEDANCE: 50 OHMS
   INSULATION RESISTANCE: 5000 MOHMS
   DIELECTRIC WITHSTAND VOLTAGE: 500V RMS
   CONTACT RESISTANCE: CENTRE CONTACT 1.5 mOHMS
   OUTER CONTACT 0.2 mOHMS
8. MECHANICAL CHARACTERISTICS
   DURABILITY: 50 CYCLES
9. FOR TECHNICAL DATA REFER TO YOUR LOCAL TYCO ELECTRONICS SALES OFFICE
10. ALL DIMENSIONS ARE NOMINAL FOR REFERENCE ONLY UNLESS OTHERWISE STATED

DIMENSIONS							DIE SET	CABLE GROUPS	PART NO.
						1.1	9-1478242-0	RG58C/U, 141A/U, 303/U, URM43, 76, BELDEN 9907, KX15	5-1634500-3
						1.1	9-1478242-0	RG58C/U, 141A/U, 303/U, URM43, 76, BELDEN 9907, KX15	5-1634500-2
						0.57	9-1478242-0	RG174A/U, 188A/U, 316/U, URM95, KX3B, KX22A	5-1634500-1
						0.57	9-1478242-0	RG174A/U, 188A/U, 316/U, URM95, KX3B, KX22A	5-1634500-0

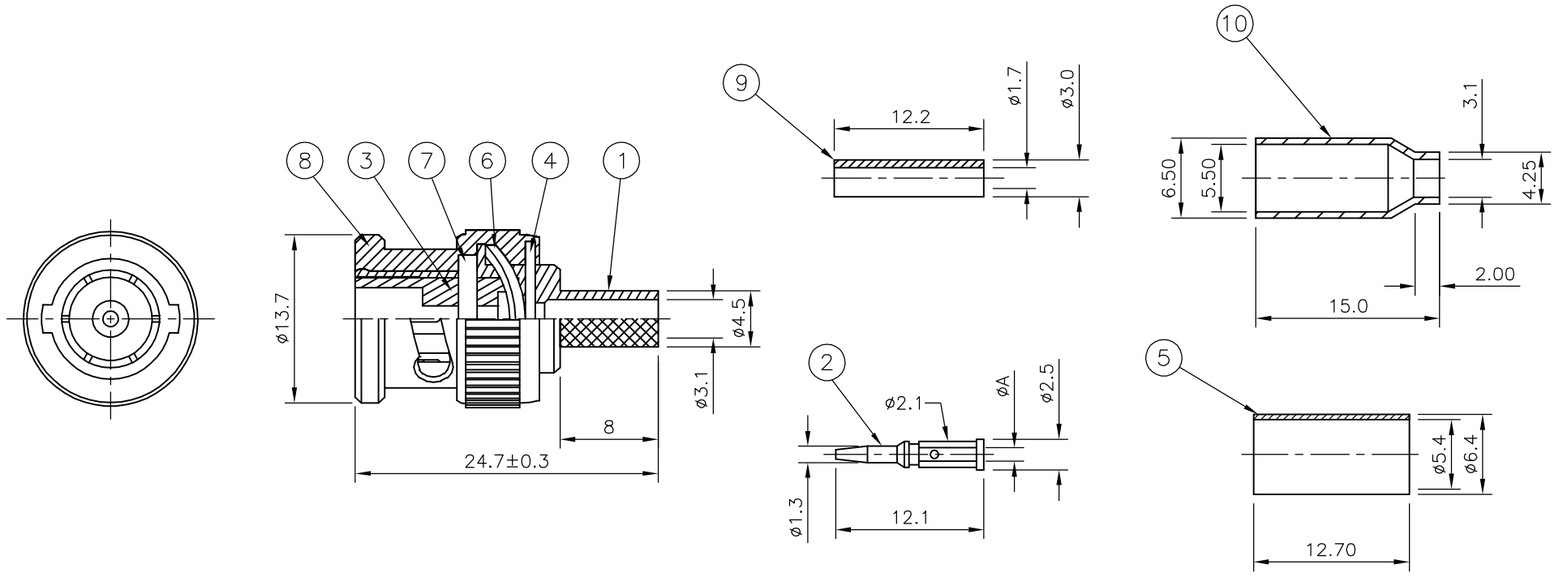

RECOMMENDED CENTRE CONTACT A/F HEX

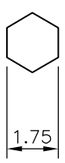

RECOMMENDED CRIMP SLEEVE A/F HEX

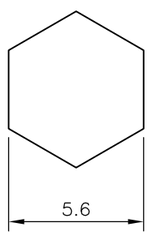

RECOMMENDED CABLE STRIPPING DIM'S

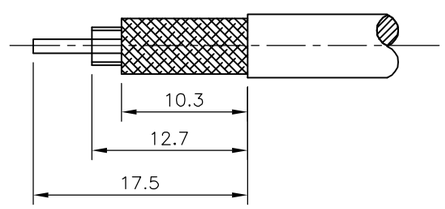

				–	–	1	1	ZINC ALLOY 4	CRIMP SLEEVE	10
				–	–	1	1	NYLON	PUSHER SLEEVE	9
				1	1	1	1	ZINC ALLOY 4	BARREL	8
				1	1	1	1	SILCON RUBBER	GASKET	7
				1	1	1	1	SPRING STEEL	SPRING	6
				1	1	–	–	BRASS 4	CRIMP SLEEVE	5
				1	1	1	1	BRASS 4	CIRCLIP	4
				1	1	1	1	POLYMETHYLPENTENE	INSULATOR	3
				1	1	1	1	BRASS 3	CONTACT	2
				1	1	1	1	ZINC ALLOY 4	BODY	1
				5--3	5--2	5--1	5--0	MATERIAL	DESCRIPTION	ITEM
				1	2	1	2			
QUANTITY PER ASSY								PARTS LIST		

THIS DRAWING IS A CONTROLLED DOCUMENT.

DIMENSIONS: mm

TOLERANCES UNLESS OTHERWISE SPECIFIED:
0 PLC ± –
1 PLC ± –
2 PLC ± –
3 PLC ± –
4 PLC ± –
ANGLES ± –

MATERIAL: SEE TABLE

FINISH: SEE TABLE

DWN J.SANDWELL 16JUN04
CHK S.PARLOW 15DEC04
APVD F.WHEELER-KING 15DEC04
PRODUCT SPEC —
APPLICATION SPEC —
WEIGHT —

tyco Electronics

Tyco Electronics Corporation
Bideford, UK, EX39 4HE

NAME: BNC STRAIGHT PLUG HEX CRIMP 50 OHM
–
–

SIZE	CAGE CODE	DRAWING NO	RESTRICTED TO
A3	00779	C-1634500	—

CUSTOMER DRAWING

SCALE NTS | SHEET 1 OF 1 | REV B

AMP 1470-19 REV 31MAR2000