DRAWING NUMBER		
605910-ENV	A3	BS 8888 THIRD ANGLE PROJECTION IF IN DOUBT, ASK

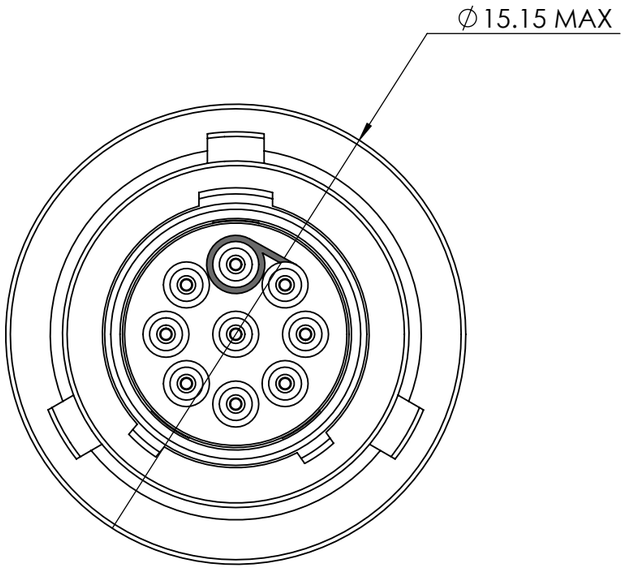

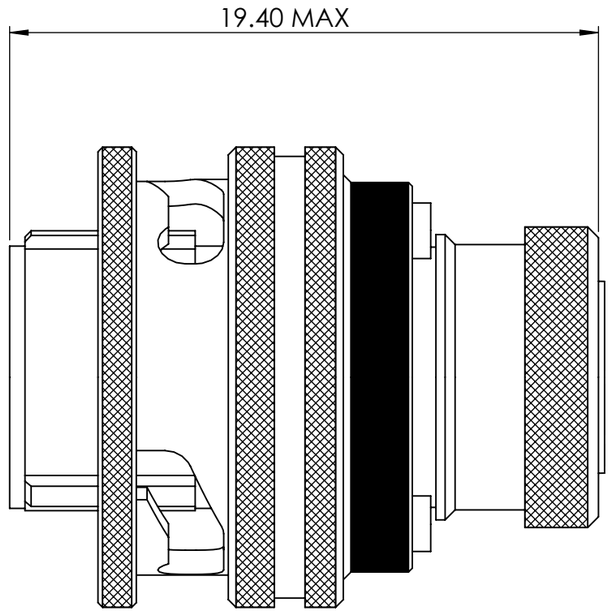

NOTE

1. ALL DIMENSIONS ARE FOR REFERENCE ONLY.

2. CONNECTOR SHOWN IS PIN VARIANT.

3. PART NUMBER & BATCH NUMBER EXAMPLE FOR STANDARD VERSIONS :-

DEUTSCH A ASDD606-09PN-HE-**** RP654321

- BUILD STANDARD — A
- SERIES PREFIX — ASDD
- STYLE — 6
- SHELL SIZE — 06
- CONTACTS ARRANGEMENT — 09
- CONTACT TYPE — P
- ORIENTATION — N
- HARSH ENVIRONMENT — HE
- MODIFICATION CODE — ****
- SUITABLE SPACE — RP654321
- BATCH NUMBER — 654321

A	62033	NDL	BJJ	KJF	MDP	07/07/05
ISSUE	CHANGE NOTE	DRAWN	CHECKED	APP. ENG.	APP. MARKT.	DATE

MATERIAL		© THE COPYRIGHT OF THIS DRAWING IS RESERVED BY DEUTSCH UK. IT IS ISSUED ON CONDITION THAT IT IS NOT COPIED, REPRODUCED OR DISCLOSED TO A THIRD PARTY EITHER WHOLLY OR IN PART WITHOUT THE CONSENT IN WRITING OF DEUTSCH UK.	DEUTSCH ST LEONARDS ON SEA, EAST SUSSEX, TN38 9RF TEL. +44 (0)1424 852721
HEAT TREATMENT & FINISH			
PACKAGING		TITLE PLUG ASSEMBLY ASDD 9-WAY ENVELOPE DETAILS	DRAWING NUMBER 605910-ENV
APP. I.E.D			
SCALE	5:1		